BUSS CO-KNEADER Technology

Discover our KX Kneader Series

High-end mixing and kneading technology for the aluminium industry

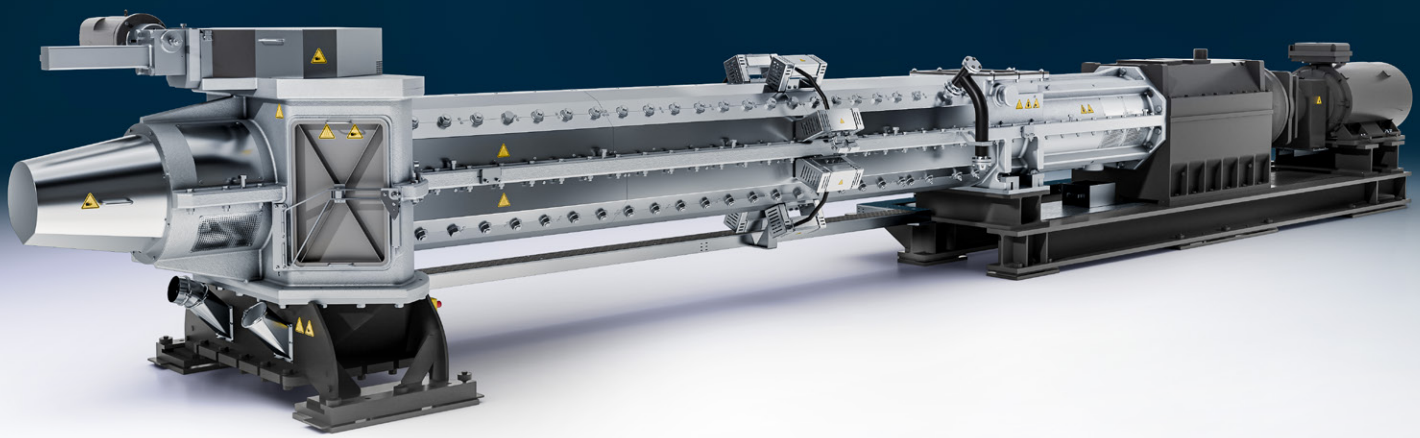

BUSS LIST Group

The most efficient mixing technology for anode paste

For more than 60 years BUSS is your reliable and experienced partner along the full life-span of projects forcost-effective compounding of anode paste.

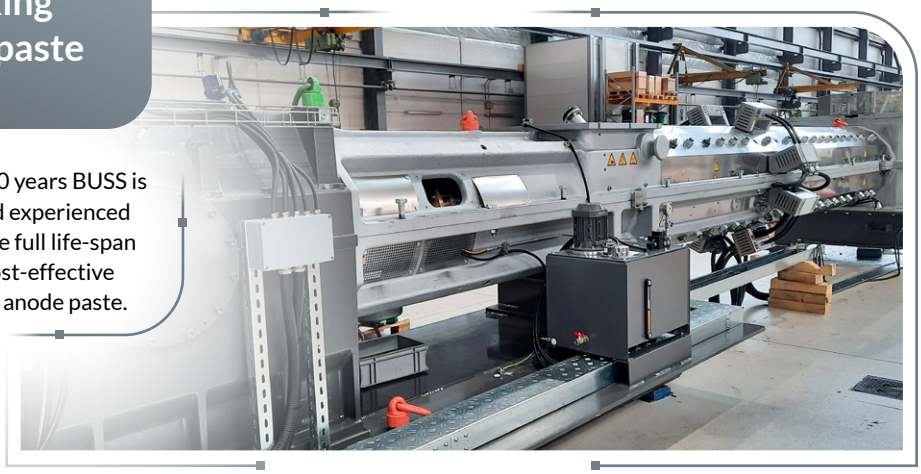

Features & Benefits

- Improved and stable anode quality due to 4-flight mixing technology, dynamic throttling and adjustable flap gate
- Higher specific output per machine size
- Improved accessibility through omission of external screw shaft bearing and heating
- Less maintenance cost due to due to low wear
- Less investment, installation and maintenance cost through electrical heating and omission of hydraulic systems
- Improved safety and user-friendliness through electrical heating
- Optimal mixing and pitch dispersion through injection of liquid pitch, preventing accretion and lumping at the same time
- No volatile emissions due to liquid pitch injection
- Reduced / optimized pitch consumption due to highly efficient mixing
- Increased operator and plant safety
- Shorter downtimes and improved service-ability
- Robust and stable design
- Longevity, stability for low operational and maintenance cost

Typical plant layout for anode paste

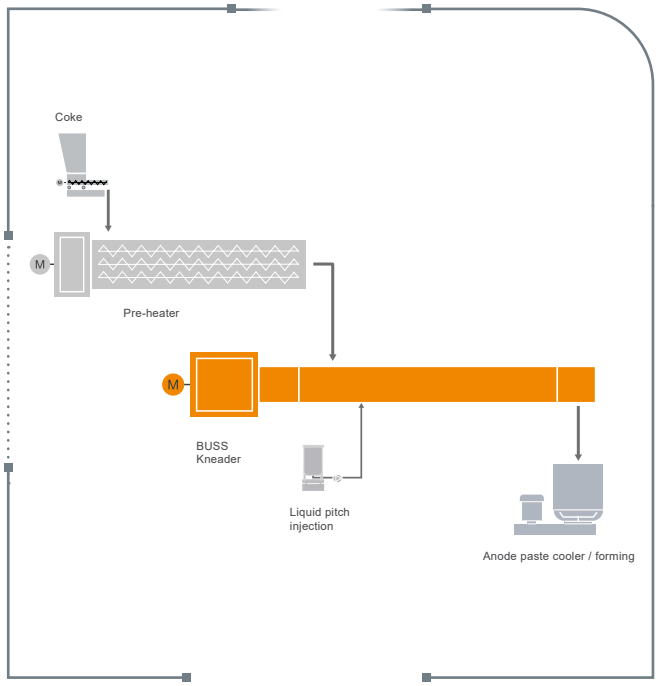

Technical Data

	BUSS Kneader Series	
	KX 540 DT	KX 650 DT
Barrel diameter [mm]	540	650
Process length [L/D]	9,5	9,5
Speed max [rpm]	70	70
Drive power [kW]	400	600
Output rates* [tons/h]	up to 40	up to 65
Dimensions** L x W x H [mm]	14000 x 2100 x 2200	15600 x 2200 x 2500

* Typical maximum rates. Maximum values may differ, contact BUSS for further information.

** Approximative values only. Excludes swivel device, tail-shaft bracket and connecting tube

Mechanical drawing

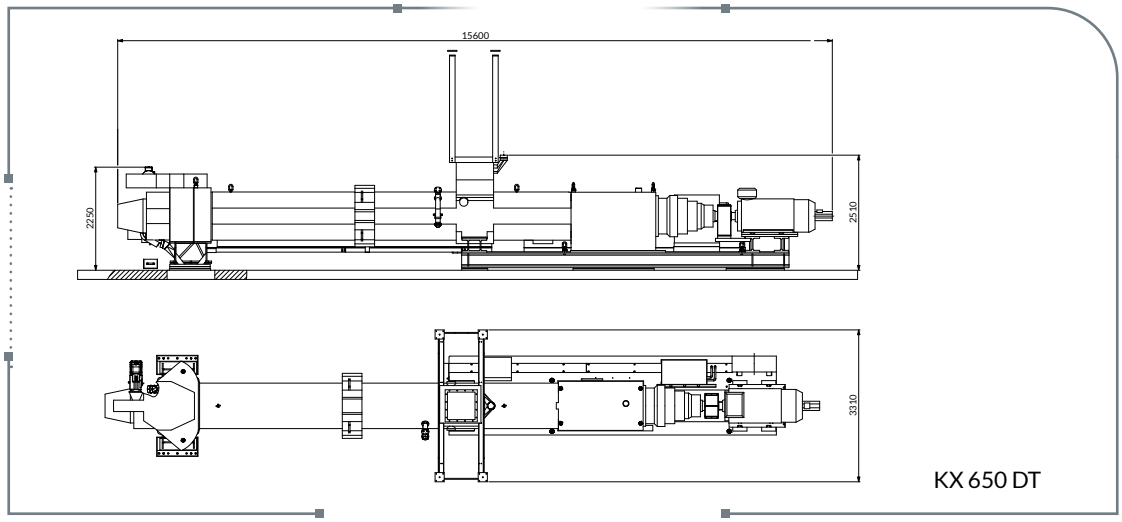

Kneader Specifications

Kneading Process

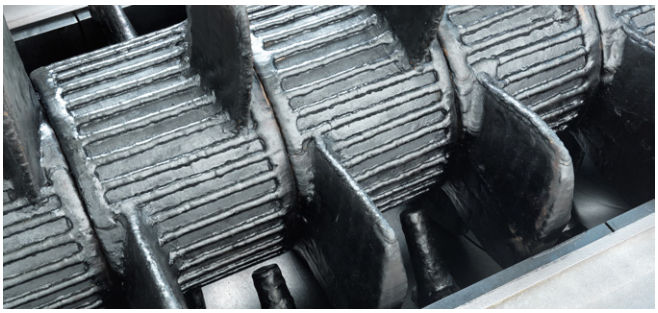

In the kneading and mixing section, the focus is on optimum mixing. Innumerable flow separations and reorientations with uniform shear rates ensure maximum homogeneity.
This leads to optimised performance of the final anode product.

Robust Design

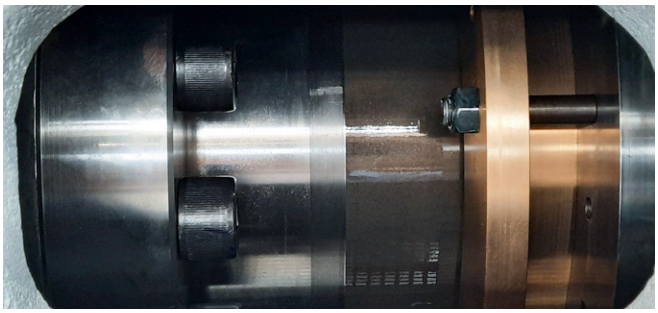

The KX co-kneader is designed for the highest requirements in the application. Long-standing experience results in long life-time, stable operation, high uptime, and reduced maintenance cost.

Pitch Injection

In the transition section, liquid pitch is directly injected into the feedstock via drilled kneading bolts.

The design provides optimimum distribution and dosing of the pitch for quality and operational cost performance.

Electrical Heating

The process area is electrically heated. This concept prevents additional installation cost compared to liquid heating (HTM).

Electrical heating in combination with the robust design of the KX allow for re-starts with fully loaded kneader barrel in case of longer, unscheduled stoppages, hence contributes to low operational cost.

BUSS CO-KNEADER Technology

BUSS.

Excellence in Compounding.

BUSS is 75 years of knowledge, innovative strength and experience in the development of compounding systems. It all stems from our highly experienced employees, who bring maximum quality and professionalism to all our services. BUSS' core competence is customer- and product-specific solutions of processing tasks. Always analogous to the high demands on process technology and product quality as well as the constantly increasing technological market needs. The performance strength and investment security in our systems can be summarized in two words: Swiss quality. All of this makes us a leading supplier of high-quality compounding technology.

BUSS AG
Hohenrainstrasse 10
4133 Pratteln
Switzerland
P +41 61 825 66 00
F +41 61 825 68 58
info@busscorp.com
www.busscorp.com

BUSS Compounding Solutions
(Shanghai) Co., Ltd.
Building 8, No. 2317
Shengang Road, Songjiang
District
Shanghai 201611, PRC
P +86 21 64339233
F +86 21 64332793
info.cn@busscorp.com

BUSS Japan Ltd.
Wakura Building 702,
1–5, Fukagawa 1 chome
Koto-ku, Tokyo 135-0033
Japan
P +81 3 5646 7611
F +81 3 5646 7612
info.jp@busscorp.com

BUSS, Inc. USA
743 Kimberly Drive
Carol Stream, IL 60188
USA

P +1 630 933 9100
F +1 630 933 0400
info.us@busscorp.com

More details
about our
KX Kneader.

BUSS LIST Group